Assembly instructions

ADVENTURIDGE

SUN AWNING

MANUAL DEVELOPED IN GERMANY
hanse control
myhansecontrol.com
User-friendly Manual
ID: #05007

Contents

Overview **3**
Use **4**
Scope of delivery/parts list **6**
General information **7**
Reading and storing the assembly instructions 7
Explanation of symbols 7
Safety **8**
Proper use 8
Safety notes 8
First use **10**
Checking the sun awning and product contents 10
Preparation 11
Setting up the sun awning 11
Care instructions **12**
Taking down and storing the sun awning **12**
Technical data **13**
Disposal **13**
Disposing of the packaging 13
Disposing of the sun awning 13
Warranty Card **15**
Warranty conditions **16**

Dok./Rev.-Nr. 93678_20160301

A

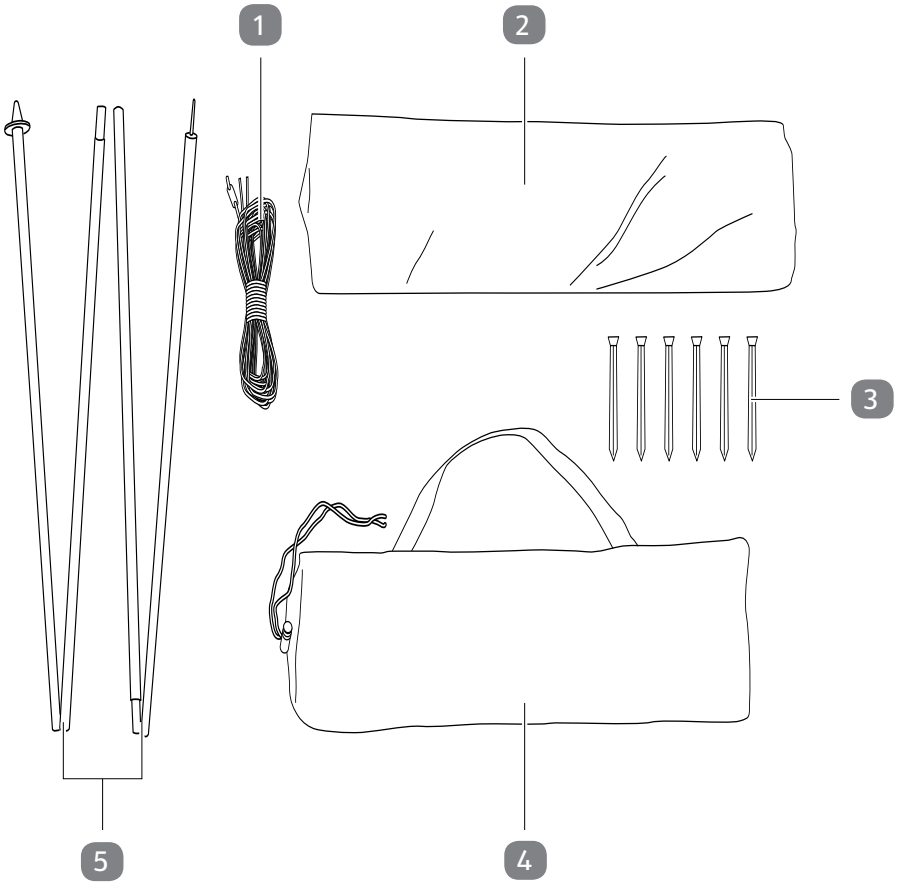

B

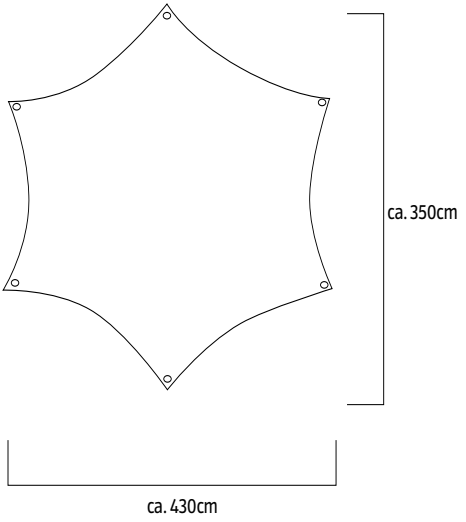

C

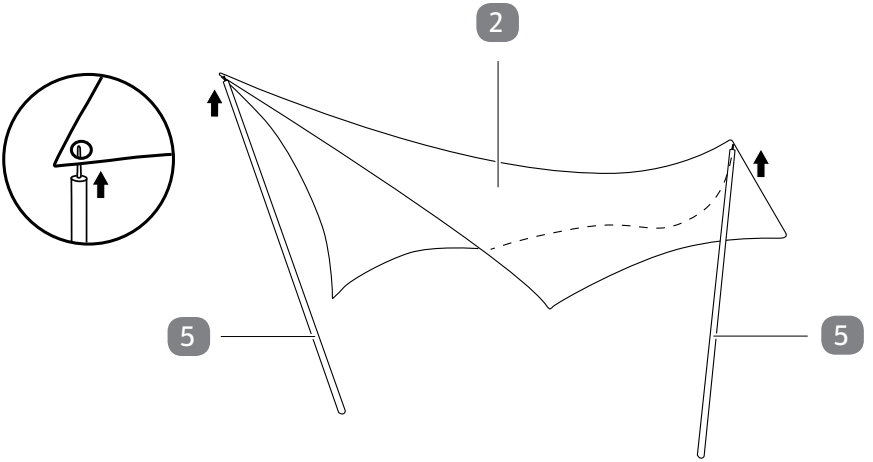

D

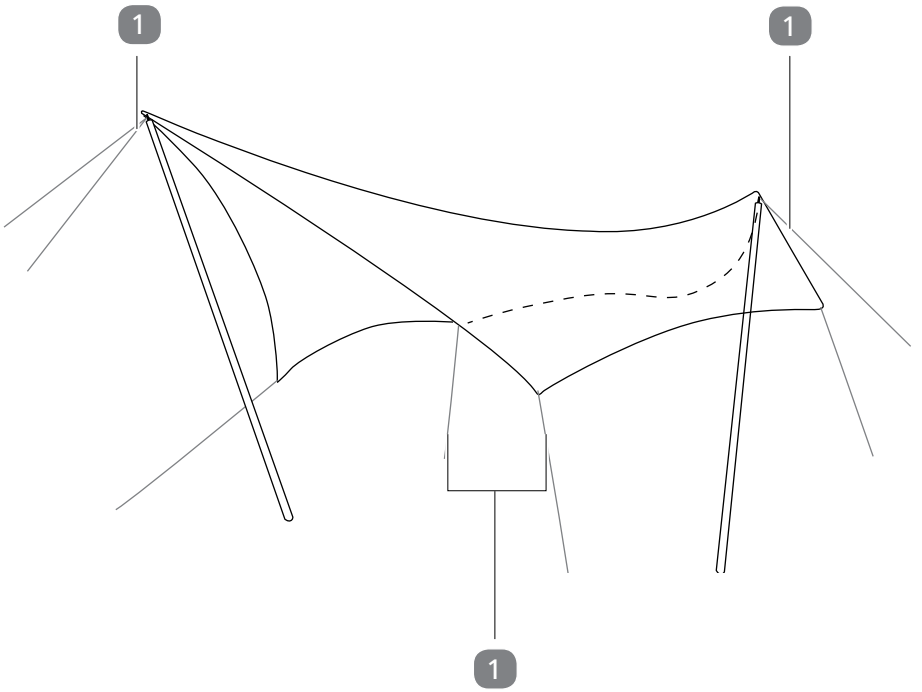

Scope of delivery/parts list

1. Guy lines, 8×
2. Sun awning
3. Pegs, 6×
4. Storage bag with carrying strap
5. Steel rods (4 elements), 2×

General information

Reading and storing the assembly instructions

These assembly instructions accompany this sun awning. It contains important information on start-up and handling.

Before using the sun awning, read the assembly instructions carefully. This particularly applies for the safety notes. Failure to heed these assembly instructions may result in severe injury or damage to the sun awning.

The assembly instructions are based on the standards and rules in force in the European Union. When abroad, you must also observe country-specific guidelines and laws.

Hold onto the assembly instructions for future reference. If you pass the sun awning on to third parties, be absolutely sure to include these assembly instructions.

Explanation of symbols

The following symbols and signal words are used in these assembly instructions, on the sun awning or on the packaging.

⚠ WARNING!	This signal symbol/word designates a hazard with moderate degree of risk which may lead to death or severe injury if not avoided.
⚠ CAUTION!	This signal symbol/word designates a hazard with low risk that, if not avoided, may result in minor or moderate injury.
NOTICE!	This signal word warns against potential damages to property.

This symbol provides you with useful supplementary information on assembly.

Safety

Proper use

The sun awning is only designed for providing protection against the sun or light rain. It is only intended for private use and not suitable for commercial purposes.

Before first use, read through these assembly instructions and be absolutely sure to observe the safety notes. Only use the sun awning as described in these assembly instructions. Any other use is deemed improper and may result in damage to property or even personal injury. The sun awning is not a children's toy.

The shape or function of the sun awning must not be modified in any way. The manufacturer or vendor accepts no liability for damage caused by improper or incorrect use.

Safety notes

⚠ WARNING!

Danger for children and persons with impaired physical, sensory or mental capacities (e.g. partially disabled persons, older persons with reduced physical and mental capacities) or lack of experience and knowledge (e.g. older children)!

If the sun awning is used improperly, there is a risk of injury to persons.

- This awning may be used by children ages eight and over as well as persons with impaired physical, sensory or mental capacities or those lacking experience and knowledge if they are supervised or have been instructed in how to safely use the awning and have understood the risks associated with operating it.
- Children must not play with the sun awning.
- Cleaning and user maintenance must not be performed by unsupervised children.
- Do not allow children or persons requiring assistance to use the sun awning without supervision.
- Keep children away from the guy lines. There is a risk of strangulation.

flexxtrade-gb@teknihall.com; flexxtrade-ie@teknihall.com
AFTER SALES SUPPORT
GB IRE 00800/78747874

- Do not allow children to play with the packaging material. Children could swallow it when playing and suffocate.
- Make sure that no one slips the storage bag over their head. There is a risk of suffocation.

⚠ CAUTION!

Risk of injury for persons due to improper use!
The sun awning could cause personal injury if used improperly.

- Do not set up the sun awning in the event of wind, rain and snow.
- The sun awning does not offer sufficient protection against the sun. You must also use sunblock when under the sun awning.

NOTICE!

Risk of damage!
Improper handling of the sun awning may result in damage to the sun awning.

- The sun awning can be quickly set up and taken down and it may only be set up for the duration of use. It is not designed for permanent use.
- Immediately take down the sun awning in the event of incoming bad weather.
- When setting up the sun awning, make sure that the ground is level.
- When setting up the sun awning on hard ground (paver stones etc.), it will not be possible to secure it with the enclosed guy lines or pegs. Use suitable aids to securely anchor it.
- Do not start a fire under or near the sun awning.
- Do not place any cooking appliances or heaters under the sun awning.
- Do not hang any lighting fixtures under the sun awning.

- Do not place any objects on the sun awning.
- Regularly check the sun awning and its parts for damages.
- Have a specialist repair the sun awning immediately when it is damaged.
- Secure the sun awning with all guy lines and securely anchor them in the ground with the pegs.

First use

Checking the sun awning and product contents

NOTICE!

Risk of damage!
If you are not cautious when opening the packaging with a sharp knife or other pointy objects, you may damage the sun awning.

- Be very careful when opening it.

1. Take the sun awning out of the packaging.
2. Check to make sure that the delivery is complete (see **fig. A**).
3. Check whether the sun awning or the individual parts exhibit damages. If this is the case, do not use the sun awning. Contact the manufacturer at the service address specified on the warranty card.

flexxtrade-gb@teknihall.com; flexxtrade-ie@teknihall.com
AFTER SALES SUPPORT
GB IRE 00800/78747874

Preparation

⚠ CAUTION!

Risk of injury!

– The sun awning must not be set up in the event of strong wind or a storm. There is a risk of the sun awning coming loose from the anchorage. Persons could be injured as a result.

Set up the sun awning once as a trial to familiarise yourself with the construction.
Notes on the setup location:

- Choose a location for setup that is out of the wind, e.g. in the wind shadow of trees, hedges or a house.
- The ground should be firm without any depressions or holes to ensure that the pegs can be securely anchored. Remove rocks, sticks or any other sharp-edged objects.
- Make sure that there is enough space around the sun awning to tighten the guy lines sufficiently far apart.
- The sun awning is not able to withstand snow loads. Never expose it to snow loads.
- Sandy soil does not offer enough possibilities for anchoring the sun awning. Set up the sun awning on suitable soil.
- The sun awning is not designed for extreme weather conditions such as hail or heavy rain. Immediately take down the sun awning in the event of impending hail or heavy rain.

Setting up the sun awning

Setting up the sun awning is easier with the help of a second person.

1. Take the sun awning out of the storage bag 4 and spread it out on clean, level ground (see **fig. B**).
2. Place all enclosed parts (steel rods 5, guy lines 1, pegs 3) on the ground.
3. Connect the rods. A rubber band elastically connects the individual parts of the rods with one another to facilitate the assembly.

4. Insert the metal tips of the rods through the metal loops of the sun awning 2 and set up the sun awning (see **fig. C)**.
5. Tighten the guy lines, which have been fastened to the corners and secure them in the ground with the enclosed pegs (see **fig. D**).

Always insert the pegs of the sun awning diagonally in the ground at an angle of 45° degrees.

Care instructions

- Use clean water or a commercially available tent cleaner to remove dirt and stains. Do not in any case wash or dry clean the sun awning.
- From time to time, seal the seams with seam sealer.
- The sun awning is impregnated and water-repellent. From time to time, treat the outer material with waterproofing spray to keep it water-repellent.
- You can fix small leaks or cracks in the outer material yourself with suitable glues and/or repair sets.

Taking down and storing the sun awning

NOTICE!

Risk of damage!
Improper handling of the sun awning may result in damage to the sun awning.

– Only pack the sun awning in a dry state to prevent mould stains or damage to the material.

- Take down the sun awning by reversing the steps for setting it up.
- Fold the clean, dry sun awning, which has been folded up, down to the length of the storage bag.
- Place the steel rods, guy lines and pegs packed in separate bags on the sun awning. Always connect the rods carefully to avoid breaking them.
- Roll the sun awning up with the rods, the guy lines and pegs.
- Store and transport the sun awning in the storage bag.

flexxtrade-gb@teknihall.com; flexxtrade-ie@teknihall.com
AFTER SALES SUPPORT
GB IRE 00800/78747874

Technical data

Model:	FLX-SS-01
Length of the sun awning:	approx. 430 cm
Width of the sun awning:	approx. 350 cm
Setup height:	approx. 200 cm
Article number:	93362

As our products undergo continual development and improvement, technical changes and changes to the product design are possible. This user manual can also be downloaded as a PDF file from our homepage **www.flextrade.de**.

Disposal

Disposing of the packaging

Dispose of the packaging separated into single type materials. Dispose of cardboard and carton as waste paper and foils via the recyclable material collection service.

Disposing of the sun awning

Dispose of the sun awning in accordance with the applicable disposal regulations for your country. Contact your public waste disposal authority for information on possibilities for proper disposal.

flexxtrade-gb@teknihall.com; flexxtrade-ie@teknihall.com
AFTER SALES SUPPORT
GB IRE 00800/78747874

GB IRE

ADVENTURIDGE

WARRANTY CARD

SUN AWNING

colour: ☐ beige ☐ green

Your details:

Name _____

Address _____

_____

_____

☎ _____ E-mail[1] _____

Date of purchase* _____

* We recommend you keep the receipt with this warranty card.

[1] for status reports for repair

Location of purchase _____

Description of malfunction:

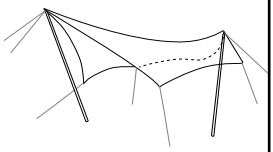

If after contacting the manufacturer you are requested to return the faulty product please return the completed warranty card together with it.

Flexxtrade Service Center

flexxtrade-gb@teknihall.com
flexxtrade-ie@teknihall.com

AFTER SALES SUPPORT

☎ GB IRE 00800/78747874 💻 GB flexxtrade-gb@teknihall.com IRE flexxtrade-ie@teknihall.com

MODEL:FLX-SS-01 PRODUCT CODE: 93362 06/2016

Free hotline

3 YEARS WARRANTY

Warranty conditions

Dear Customer,

The **ALDI warranty** offers you extensive benefits:

Warranty period:	3 years from date of purchase.
Costs:	Free repair/exchange. No transport costs.
Hotline:	Free hotline.
ADVICE:	Please contact our service hotline by phone, e-mail or fax before sending in the device. This allows us to provide support in the event of possible operator errors.

In order to make a claim under the warranty, please send us:

- the faulty item together with the original purchase receipt and the completed warranty card.
- the product with all components included in the packaging.

The warranty does not cover damage caused by:

- **Accident** or **unanticipated events** (e.g. lightning, water, fire).
- **Improper use** or **transport**.
- **Disregard of the safety** and **maintenance instructions.**
- Other **improper treatment** or **modification**.

After the expiry of the warranty period, you still have the possibility to have your product repaired at your own expense. If the repair or the estimate of costs is not free of charge you will be informed accordingly in advance.

This warranty does not affect your statutory rights. In the event that a product is received for repair, neither the service company nor the seller will assume any liability for data or settings possibly stored on the product by the customer.

Great care has gone into the manufacture of this product and it should therefore provide you with years of good service when used properly. In the event of product failure within its intended use over the course of the first 3 years after date of purchase, we will remedy the problem as quickly as possible once it has been brought to our attention. In the unlikely event of such an occurrence, or if you require any information about the product, please contact us via our helpline support services, details of which are to be found both in this manual and on the product itself.

GB IRE

PRODUCED IN CHINA FOR:
ALDI STORES LTD. PO BOX 26, ATHERSTONE
WARWICKSHIRE, CV9 2SH.

ALDI STORES (IRELAND) LTD.
PO BOX 726, NAAS, CO. KILDARE.
visit us at www.aldi.com

AFTER SALES SUPPORT

GB IRE **00800/78747874**
flexxtrade-gb@teknihall.com
flexxtrade-ie@teknihall.com

MODEL: FLX-SS-01 PRODUCT CODE: 93362 06/2016

3 YEARS WARRANTY